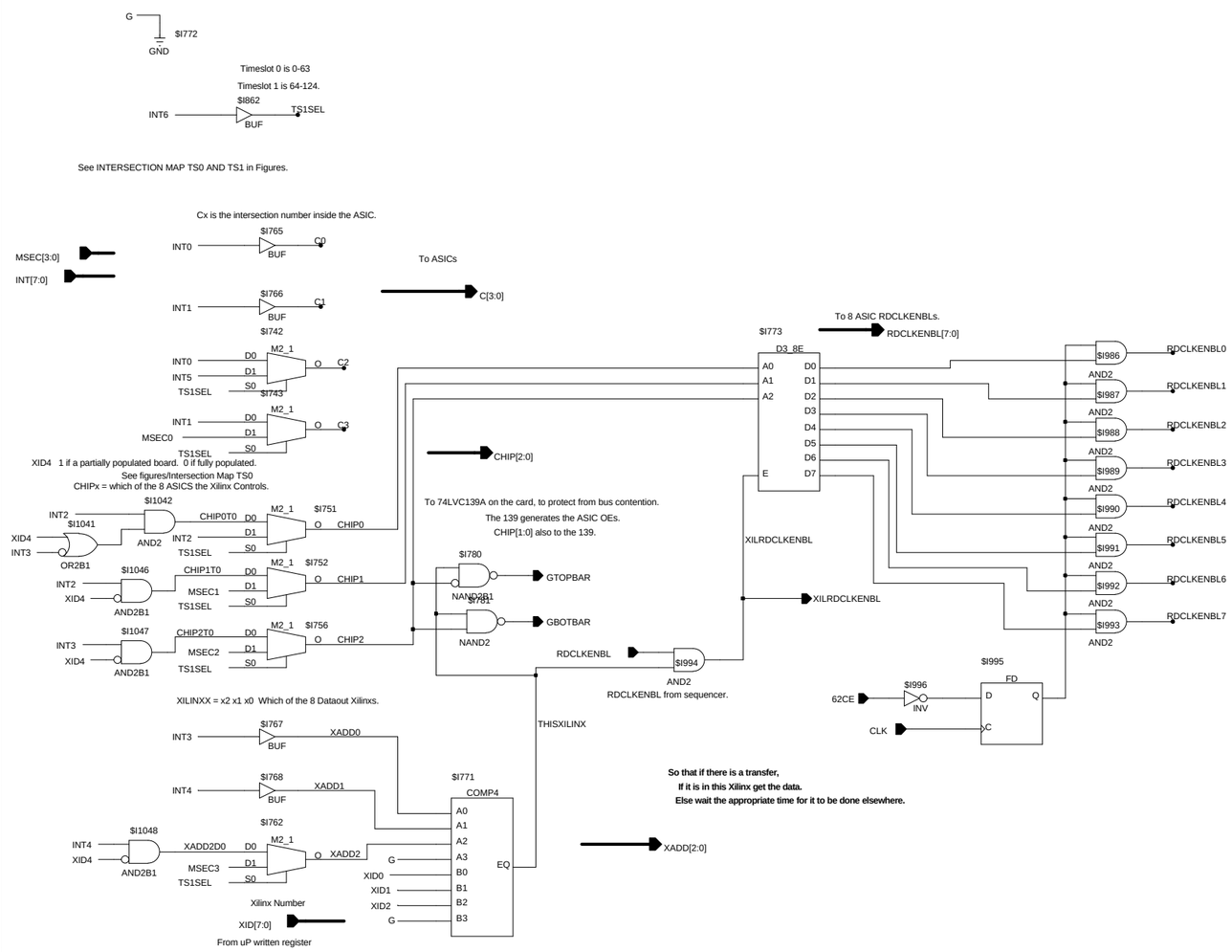

ALMA Correlator Project	Project: DATAOUT
NRAO	Macro: INTADDRESSMUX
Charlottesville, VA	Date: 3/2/00
Date Last Modified: 6/13/01	